Malpas and Birmingham Inc.
962 Chula Vista Ave.
Burlingame CA 94010

55 Sheridan St - Dunham Kawano
Construction Schedule
Completed Tasks in Grey,
Architect/Client Tasks in Geen

Issued: May 23, 2006
Revised August 22, 2006
September 16, 2006
October 2, 2006
Current Changes in Blue

ID	Task Name
1	Start
2	Demo Brick Bldg
3	Soil Injection
4	Neighbor Wall
5	Excavation
6	Garden Demo/Remove Dirt
7	Garden Underslab Utilities
8	Garden Concrete
9	Garden Structures
10	Garden Planting
11	Underslab Utilities
12	Underslab Inspection
13	Rebar
14	Structural Concrete
15	Shotcrete Garden Wall
16	Topping Slab 1st
17	Conc Over Pan Deck 2,3,4
18	Conc Sidewalk
19	Struc Steel Shops
20	Struc Steel Fabricate
21	Struc Steel Erect Rear
22	Struct Steel Erect Front
23	Stair Shops
24	Stair Fabricate
25	Stair Erect
26	Pan Deck
27	API Shops
28	API Fabricate
29	API Install
30	Roof Carpentry
31	Finish Carp Design
32	Finish Carpentry

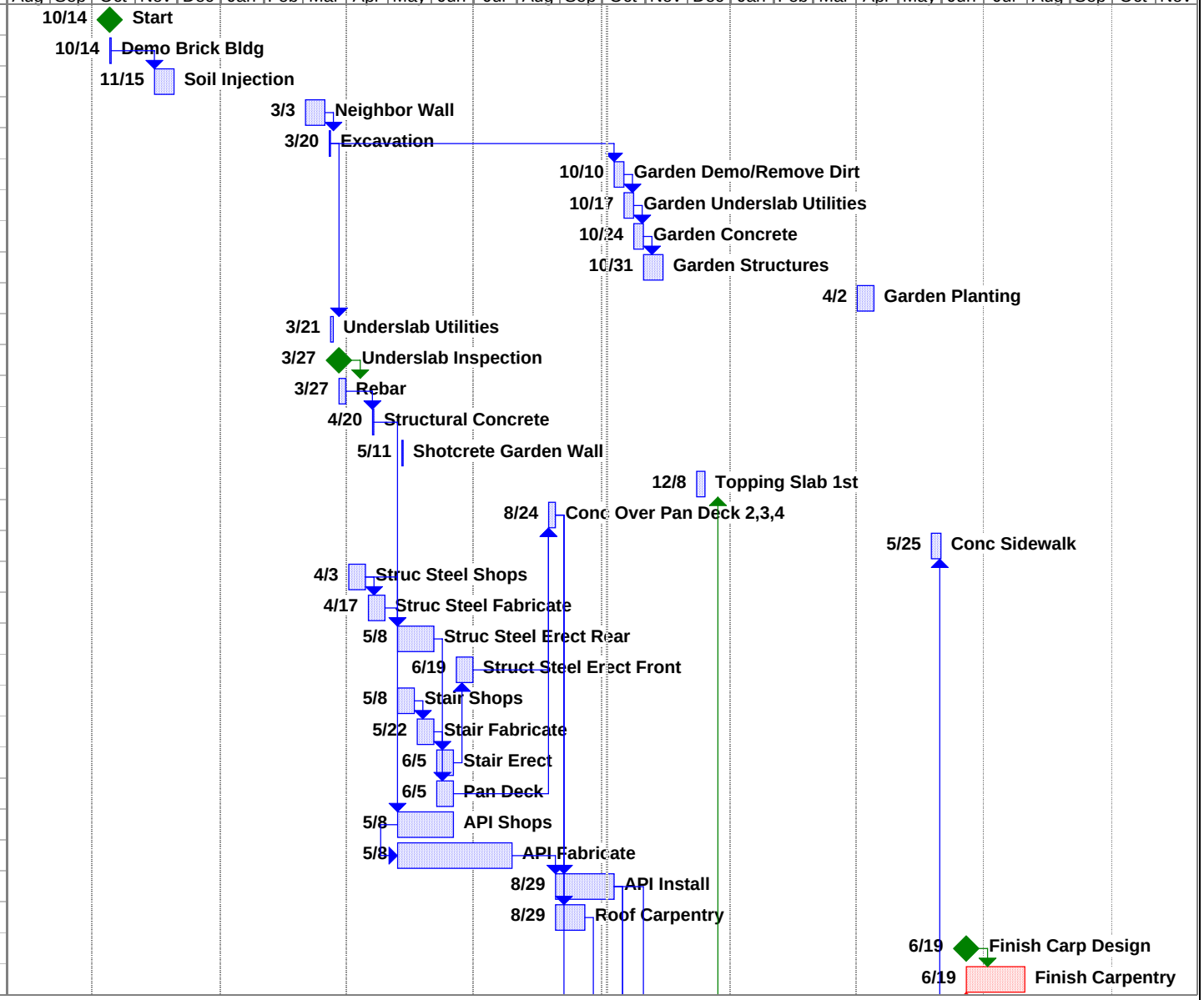

Malpas and Birmingham Inc.
962 Chula Vista Ave.
Burlingame CA 94010

55 Sheridan St - Dunham Kawano
Construction Schedule
Completed Tasks in Grey,
Architect/Client Tasks in Geen

Issued: May 23, 2006
Revised August 22, 2006
September 16, 2006
October 2, 2006
Current Changes in Blue

ID	Task Name
33	Final Casework Design
34	Casework Field Measure
35	Casework Shops
36	Casework Fabricate
37	Casework Install
38	Insulation
39	Roofing
40	Storefront Shops
41	Operable Sash Fabricate
42	Storefront Fabricate
43	Storefront Install
44	Ext Door Design
45	Ext Door Fabricate
46	Int Door Design
47	Int Door Order
48	Int Door Install
49	Final Plaster Selection
50	Cement Plaster
51	Lt Ga Framing
52	Cover-Up Inspection
53	Drywall
54	Final Counter Selection
55	Stone Counter Fabricate
56	Stone Counter Install
57	Final Flooring Slection
58	Tile/Stone Flooring
59	Wood Flooring
60	Final Paint Selection
61	Paint Ext Steel
62	Paint Int Steel
63	Paint Walls/Ceilings
64	Install Appliances

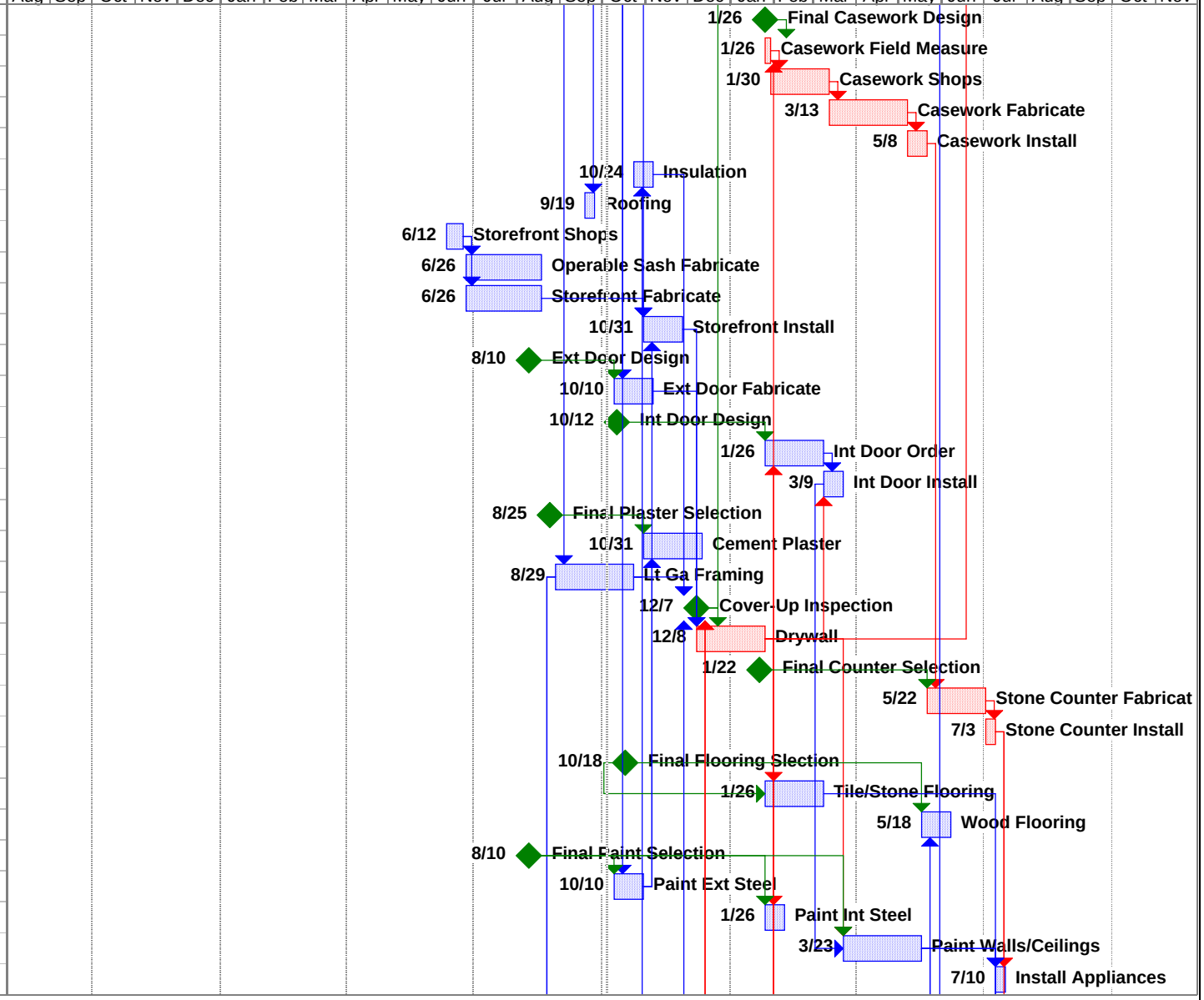

Malpas and Birmingham Inc.
962 Chula Vista Ave.
Burlingame CA 94010

55 Sheridan St - Dunham Kawano
Construction Schedule
Completed Tasks in Grey,
Architect/Client Tasks in Geen

Issued: May 23, 2006
Revised August 22, 2006
September 16, 2006
October 2, 2006
Current Changes in Blue
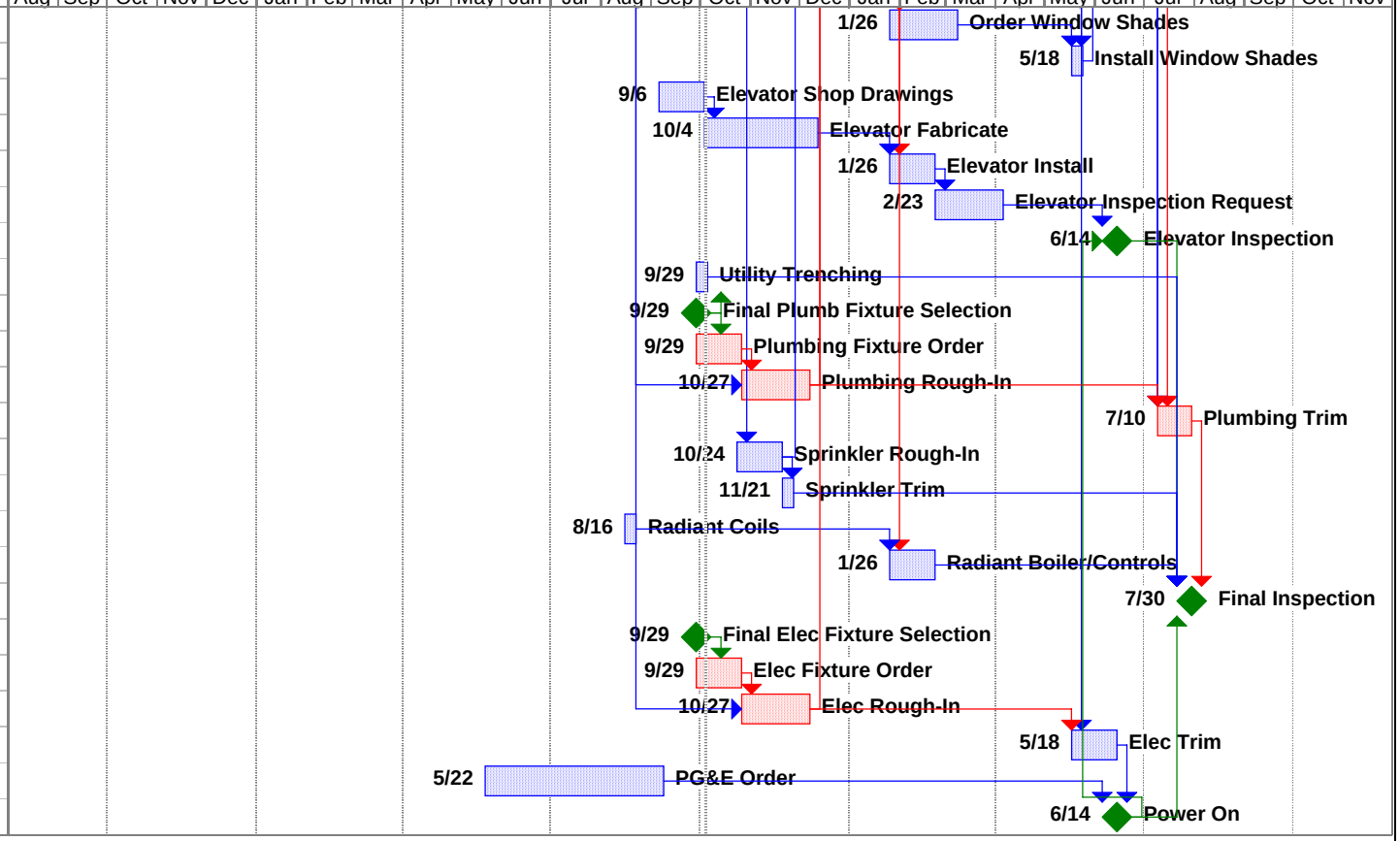
ID		Task Name
65		Order Window Shades
66		Install Window Shades
67		Elevator Shop Drawings
68		Elevator Fabricate
69		Elevator Install
70		Elevator Inspection Request
71		Elevator Inspection
72		Utility Trenching
73		Final Plumb Fixture Selection
74		Plumbing Fixture Order
75		Plumbing Rough-In
76		Plumbing Trim
77		Sprinkler Rough-In
78		Sprinkler Trim
79		Radiant Coils
80		Radiant Boiler/Controls
81		Final Inspection
82		Final Elec Fixture Selection
83		Elec Fixture Order
84		Elec Rough-In
85		Elec Trim
86		PG&E Order
87		Power On